Key: 3937

Town of CHATHAM - Fiscal Year 2019

9/5/2018 3:33 pm SEQ #: 4,255

LEGAL

CURRENT OWNER	PARCEL ID	LOCATION
CBI OWNER LLC **CAPITAL PROPERTIES** **31 ST JAMES AVE** **BOSTON, MA 02116**	**16F-28-E2-0**	**332 SHORE RD**

TRANSFER HISTORY	DOS	T	SALE PRICE	BK-PG (Cert)
CBI OWNER LLC	06/24/2011	B	10	25527-1
CBI PC LLC & CBI NCA LLC	06/03/2006	J	119,000,000	(180230)
CBI NCA LLC, ATTN: RICHA	06/02/2006	J	42,804,300	21064-60

CLASS	CLASS%	DESCRIPTION	BN ID	BN	CARD
3000	100	HOTELS		1	1 of 1

PMT NO	PMT DT	TY	DESC	AMOUNT	INSP	BY	1st	%
97-425	12/01/1997	99	n/a	203,000			100	100
1987030	03/13/1987	99	n/a				100	100
1986013	02/05/1986	99	n/a				100	100
1980031	04/02/1980	99	n/a				100	100

LAND

CD	T	AC/SF/UN	Nbhd	Infl1	Infl2	ADJ BASE	SAF	Infl3	Lpi	VC	CREDIT AMT	ADJ VALUE
103	S	10,258	CI 1.00	100 1.00	100 1.00	2,228,200	2.95	100 1.00	CBI 6.50			1,546,830

TOTAL	10,258 SF	ZONING	R40	FRNT	0
Nbhd	COMMERCIAL	NOTE	No Revetment wfA		
Infl1	100				
Infl2	100				

ASSESSED	CURRENT	PREVIOUS
LAND	1,546,800	1,546,800
BUILDING	446,600	442,900
DETACHED	2,100	2,000
OTHER	0	0
TOTAL	**1,995,500**	**1,991,700**

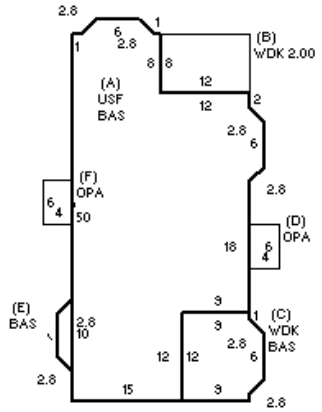

DETACHED

TY	QUAL	COND	DIM/NOTE	YB	UNITS	ADJ PRICE	RCNLD
LH1	A 1.00	50 0.50			2	2,058.20	2,100

PHOTO 11/16/2012

BLDG COMMENTS

332 LANDS END COTTAGE

BUILDING

BUILDING	CD	ADJ	DESC
MODEL	5		CIM
STYLE	44	2.00	B&B/INN [100%]
QUALITY	V	1.60	VERY GOOD [100%]
FRAME	1	1.00	WOOD FRAME [100%]

MEASURE		
LIST		
REVIEW	11/16/2012	DF

YEAR BLT	1915	SIZE ADJ	1.000
NET AREA	2,196	DETAIL ADJ	1.930
$NLA(RCN)	$245	OVERALL	1.000

CAPACITY	UNITS	ADJ
STORIES	2	1.00
% HEATED	100	1.00
% AIR COND	100	1.03
% SPRINKLER	100	1.00

ELEMENT	CD	DESCRIPTION	ADJ
FOUNDATION	2	SLAB	1.00
EXT. COVER	1	WOOD SHINGLE	1.00
ROOF SHAPE	2	HIP	1.00
ROOF COVER	2	WOOD SHINGLE	1.01
FLOOR COVER	36	CARPET/OTHER	1.00
INT. FINISH	2	DRYWALL	1.00
HEATING/COOL	16	ELECT BB W/AC	0.98
FUEL SOURCE	3	ELECTRIC	1.00

S	BAT	T	DESCRIPTION	UNITS	YB	ADJ PRICE	RCN
+	BAS	L	BASE AREA	1,168	1915	239.36	279,567
A	USF	L	UP-STRY FIN	1,028	1915	239.36	246,057
+	WDK	N	WOOD DECK	316		26.40	8,342
+	OPA	N	OPEN PORCH	48		27.69	1,329
	SPD	N	SPRNK-DRY	2,100		1.30	2,730

TOTAL RCN	538,025
CONDITION ELEM	CD
EXTERIOR	
INTERIOR	
CDN/APP	

EFF.YR/AGE	2000 / 17	
COND	17	17 %
FUNC	0	
ECON	0	
DEPR	17	% GD 83
RCNLD		$446,600